Installation Instructions for Venting Storm Doors
Directives d'installation de la contre-porte moustiquaire
Instrucciones de instalación para las puertas contra tormentas con ventilación

LARSON

NEED HELP?
- Installation Support
- Replacement Parts
- Warranty Information

1-888-483-3768
larsondoors.com
Please do not return product to store.
CALL US.

Please read the complete installation instructions before beginning. For more information visit larsondoors.com/resources.

BESOIN D'AIDE?
- Aide à l'installation
- Pièces de rechange
- Renseignements sur la garantie

1-888-483-3768
larsondoors.com
Veuillez ne pas retourner ce produit au magasin.
APPELEZ-NOUS.

Veuillez lire les directives d'installation dans leur intégralité avant de commencer l'installation. Pour obtenir de plus amples renseignements, visiter le site larsondoors.com/resources.

¿NECESITA AYUDA?
- Soporte para la instalación
- Piezas de repuesto
- Información de la garantía

1-888-483-3768
larsondoors.com
Por favor no devuelva el producto a la tienda.
LLÁMENOS.

Lea las instrucciones de instalación completas antes de comenzar. Para más información visite larsondoors.com/resources.

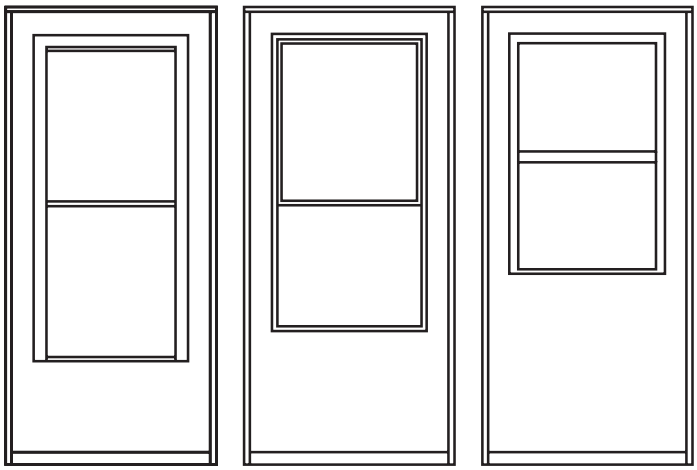

English

Pages

Installation Guide for Left-Hinge Doors 2-8

Installation Guide for Right-Hinge Doors 9-15

Français

Pages

Guide d'installation des portes avec charnières à gauche 16-22

Guide d'installation des portes avec charnières à droite 23-29

Español

Paginas

Guía de instalación para puertas con bisagras a la izquierda ... 30-36

Guía de instalación para puertas con bisagras a la derecha 37-43

#202221236-0823 Wood Core larsondoors.com

©2023 Larson Manufacturing Company. All rights reserved. Larson and the Larson logo are trademarks of Larson Manufacturing Company. Registered trademarks are registered in the U.S. and may be registered internationally. Larson Manufacturing Company is an operating company of Fortune Brands Innovations, Inc. All trademarks are property of their respective owners.

Tous droits réservés. Larson et le logo Larson sont des marques de commerce de la Larson Manufacturing Company. Les marques déposées l'ont été aux États-Unis, et pourraient avoir été déposées dans d'autres pays du monde. Larson Manufacturing Company est une société d'exploitation de Fortune Brands Innovations, Inc. Toutes les marques de commerce appartiennent à leurs propriétaires respectifs.

Todos los derechos reservados. Larson y el logo de Larson son marcas registradas de Larson Manufacturing Company. Las marcas comerciales están registradas en EE. UU. y pueden registrarse internacionalmente. Larson Manufacturing Company es una empresa operativa de Fortune Brands Innovations, Inc. Todas las marcas registradas son propiedad de sus respectivos dueños.

English

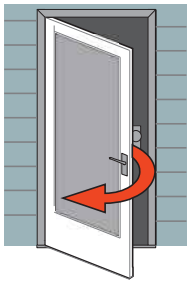

Installation Guide for **Left-Hinge** Doors

LARSON

Please turn to page 9 for Right-Hinge instructions.

Please read the complete installation instructions before beginning.
For more information visit larsondoors.com/resources.



Please have the registration number on hand when you call.

- Installation may require two people when lifting and installing the door.
- Use appropriate protective equipment.
- Children should not be allowed to play with the door.
- Failure to install door properly could result in an injury.

NOTE: Larson Manufacturing Company is not responsible for accidents or injury resulting from the use or installation of this product.

Parts List

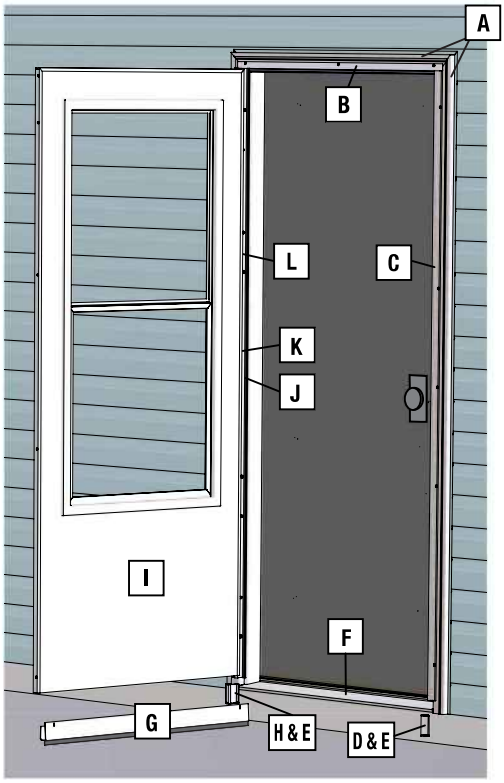

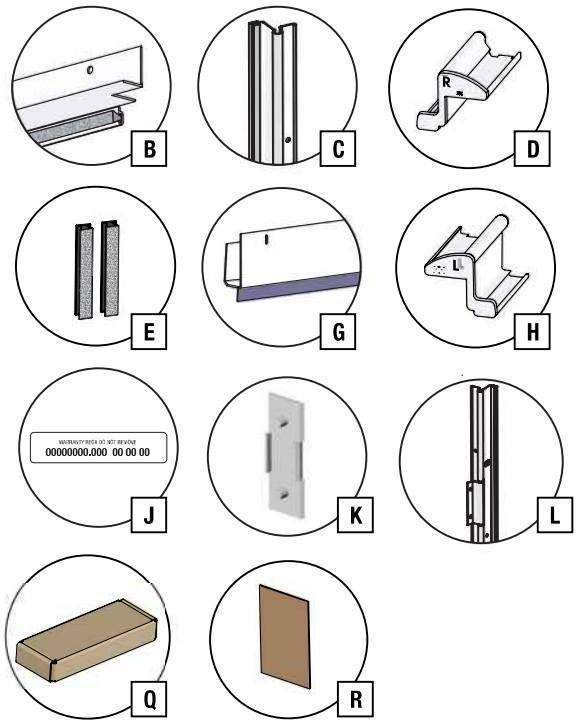

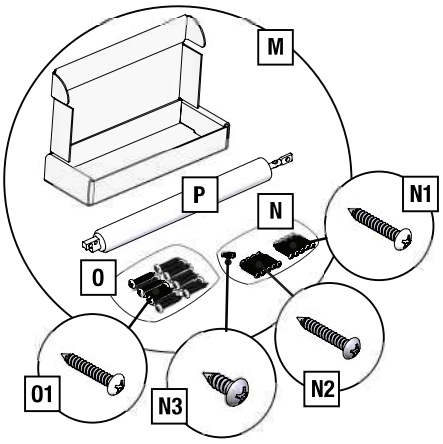

A Exterior Door Trim
B Drip Cap
C Latch Rail
D Right Rail Extender
E Extender Weatherstrip
F Door Threshold
G Expander (with Sweep)
H Left Rail Extender
I Storm Door
J Registration Number
K Hole Cover **(Select Models)**
L Hinge Rail
M Hardware Kit contents:
  N Installation Screw Pack 1
    N1 #8 x 1" Painted Screws (8 + 1 Spare)
    N2 #8 x 1" Unpainted Screws (8 + 1 Spare)
    N3 #6 x 3/8" Unpainted Screws (2)
  O Installation Screw Pack 2
    O1 #8 x 1" Painted Screws (13 + 1 Spare)
  P Closer **(Style/Quantities May Vary)**
Q Handleset Kit **(Select Models)**
R Handle Clearance Template **(Select Models)**

Tools and Materials Needed

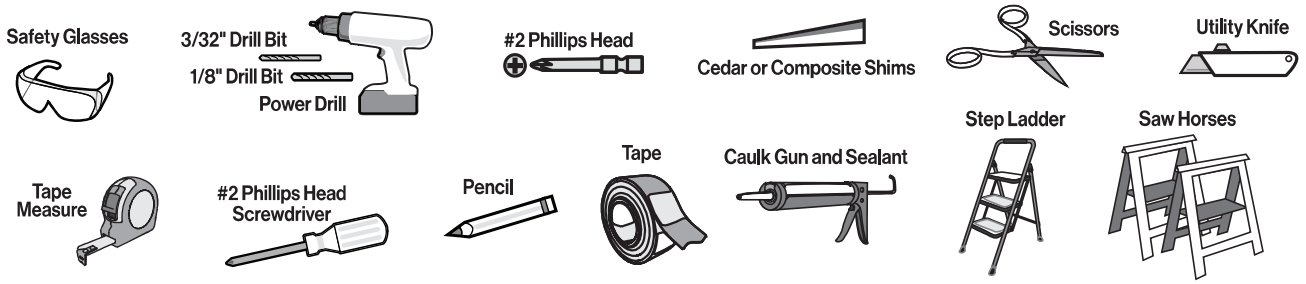

What's in the Box

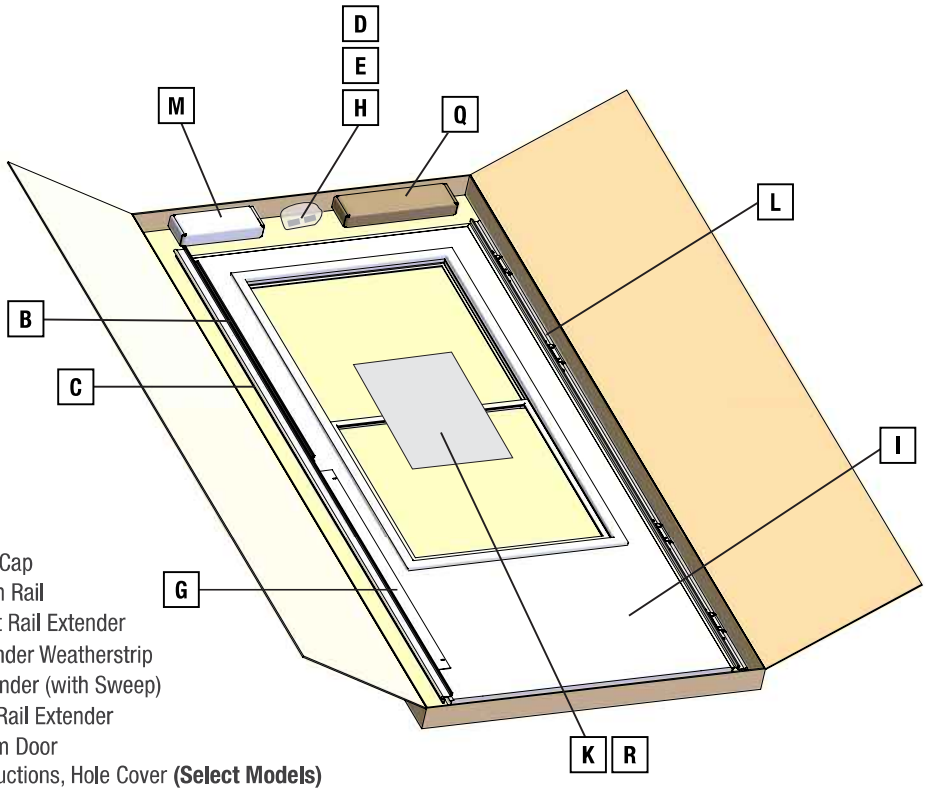

B Drip Cap
C Latch Rail
D Right Rail Extender
E Extender Weatherstrip
G Expander (with Sweep)
H Left Rail Extender
I Storm Door
K Instructions, Hole Cover **(Select Models)**
L Hinge Rail
M Hardware Kit (with Closer(s) **P** and Installation Screw Packs **N** & **O**)
Q Handleset Kit **(Select Models)**
R Handle Clearance Template **(Select Models)**

English

English

1 Preparation Steps

1. Before beginning the project please make sure you are wearing safety glasses.

   Your Larson® Reversa-Hinge storm door is designed for either right- or left-hinge installation. Confirm which side of the storm door will be the hinge side (left or right), as viewed from the exterior. Typically, the storm door hinges will be on the same side as the primary door hinges. Turn to page 9 for right-hinge installation. Oversize custom doors may not be reversible.

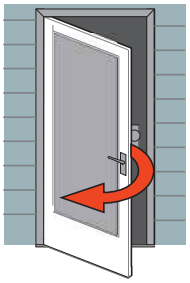

2. Minimum 1" wide x 1" deep mounting surface is required. Hinge-side shimming may be required to fit existing opening. Use an appropriate shim thickness to reduce the opening to size noted. Shims are not included.

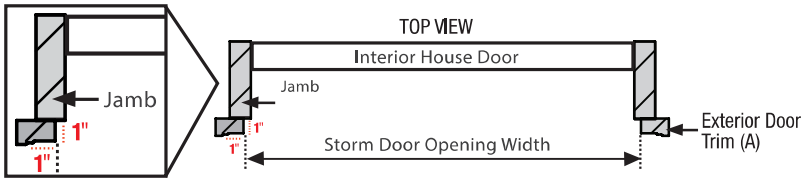

Nominal Door Sizes	Opening Width (no shim required)	Opening Width (shim required)	Shim to this Opening Width	Min. – Max. Height
30" x 81"	29-7/8" – 30"	30-1/16" – 30-3/8"	29-7/8" – 30"	80" to 81"
32" x 81"	31-7/8" – 32"	32-1/16" – 32-3/8"	31-7/8" – 32"	
34" x 81"	33-7/8" – 34"	34-1/16" – 34-3/8"	33-7/8" – 34"	
36" x 81"	35-7/8" – 36"	36-1/16" – 36-3/8"	35-7/8" – 36"	

3. Verify exterior door trim (A) is securely attached.



4. If a handle clearance template (R) was provided, follow the instructions on the template to check for handle clearance.

   If a handle clearance template (R) was not provided, the handleset can be installed at varying heights to avoid primary door hardware interference.

   Reference handleset installation instructions in hardware kit (M) or handleset kit (Q) for more information.

2 Set Placeholder Screw for Hinge Rail

1. Place the hinge rail (L) tight against the left side of the exterior door trim (A) and slide to top.

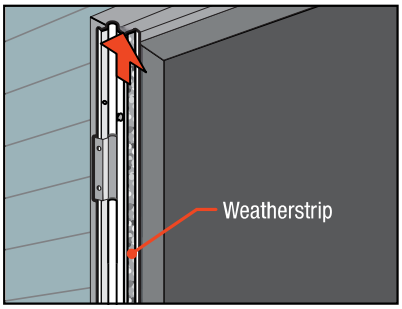

2. Locate top pre-hang hole and mark as shown with pencil. Remove hinge rail (L).

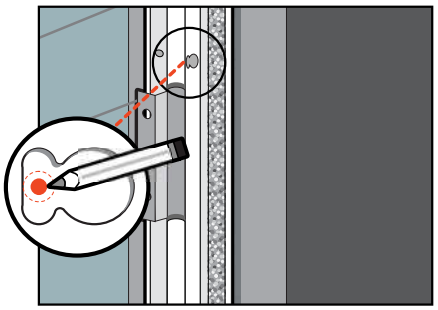

3. Pre-drill 1/8" hole and install #8 x 1" painted screw (N1 x 1), leaving 1/8" of screw threads exposed.

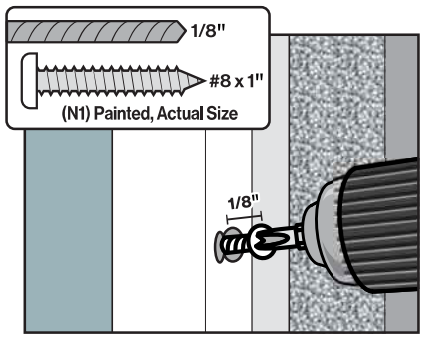

3 Attach Hinge Rail to Storm Door

1. Place storm door (I) on saw horses with the interior side face up.
2. Remove and discard the second screw from the top hinge-side corner of storm door (I).
3. Align the top hinge hole of the hinge rail (L) with the open hole on the storm door (I) and attach with screw (N2 x 1).

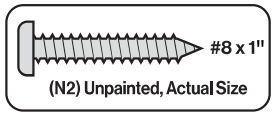

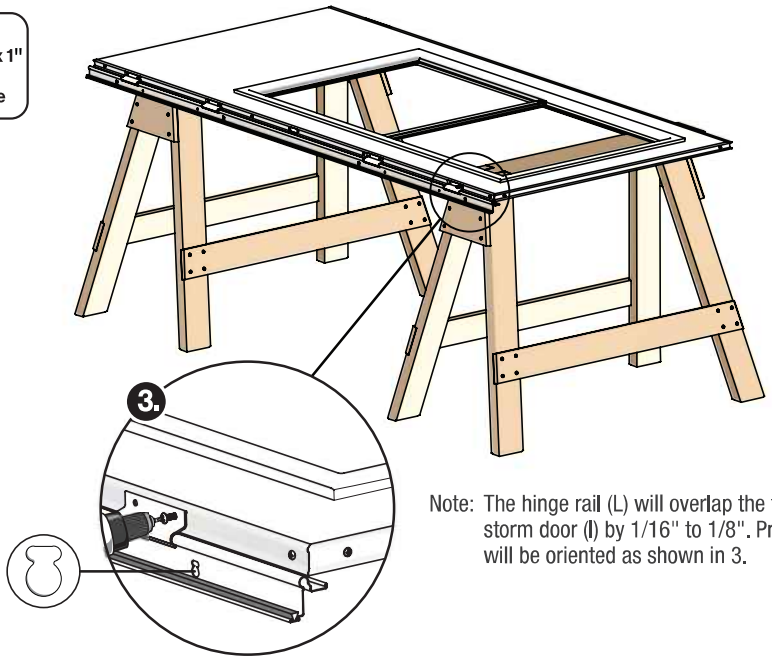

Note: The hinge rail (L) will overlap the top of the storm door (I) by 1/16" to 1/8". Pre-hang hole will be oriented as shown in 3.

4. Drill 1/8" pilot holes (x 7) into storm door (I) for remaining hinge holes on hinge rail (L). Remove any metal shavings created during this step.
5. Attach remaining hinges of the hinge rail (L) to the storm door (I) with screws (N2 x 7), starting at the bottom of the door.
6. Slide left rail extender (H) into the bottom of the hinge rail (L).
7. Install hole cover (K) (Select Models).

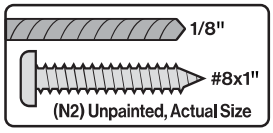

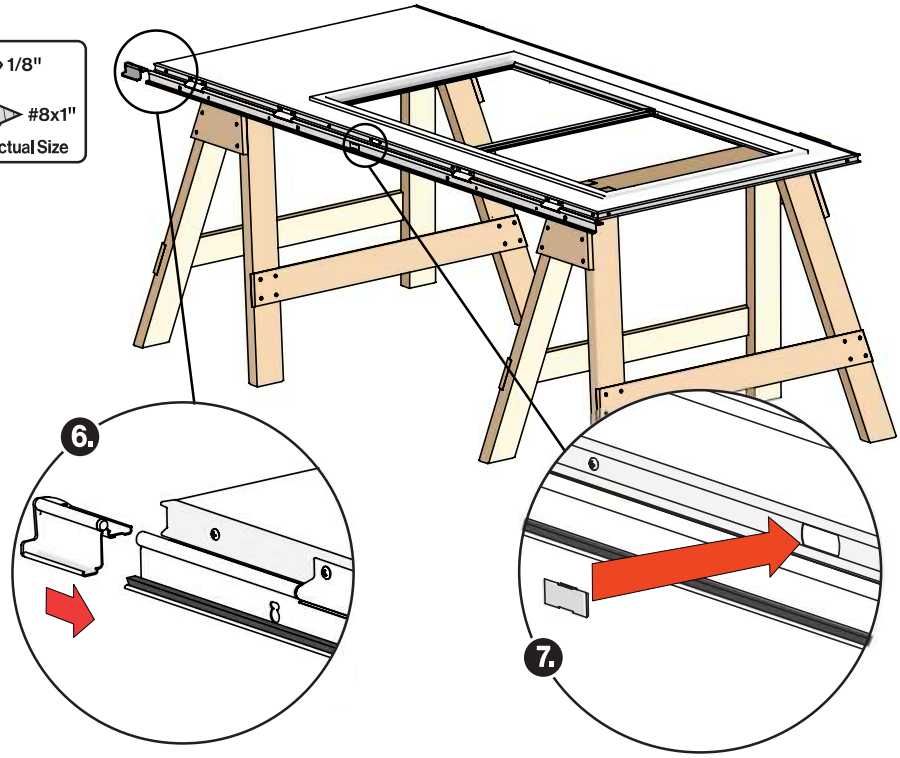

English

English

4 Attach Storm Door to Door Frame

1. Hang storm door (I) onto exterior door trim (A) using the placeholder screw from step 2. Shift the hinge rail (L) so the screw is in the shown position. The door will drop approximately 1/16". Tighten screw while pushing hinge rail (L) tight against the exterior door trim (A). **Do not overtighten.**

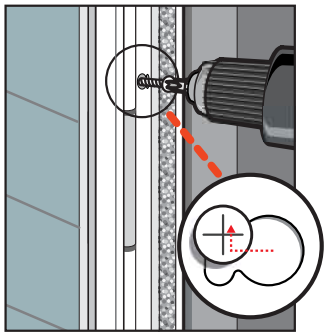

2. Press hinge rail (L) tight against exterior door trim (A) and pre-drill a 1/8" hole through the hinge rail's (L) round hole near the second hinge from the bottom. Install screw (N1 x 1). **Do not overtighten.**

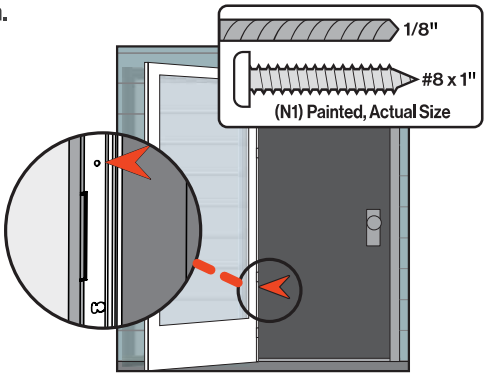

3. Slide left rail extender (H) to door threshold (F).

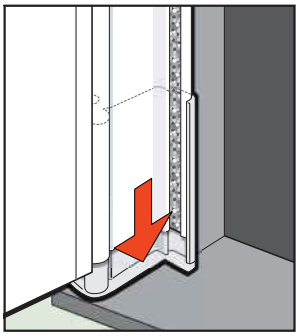

4. Pre-drill 1/8" holes (x 6) through all remaining round and pre-hang holes in hinge rail (L). Install screws (N1 x 6). **Do not overtighten.**

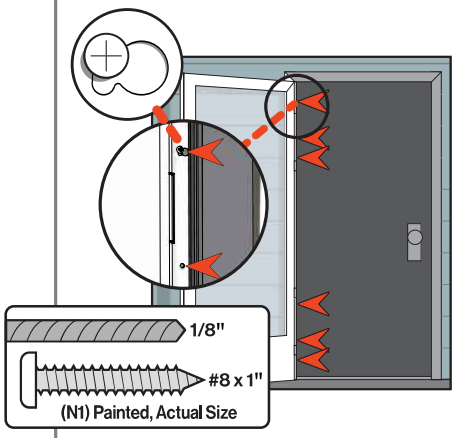

5. Pre-drill 1/8" holes (x 5) through hinge rail's (L) exterior holes and install screws (O1 x 5). **Do not overtighten screws.**

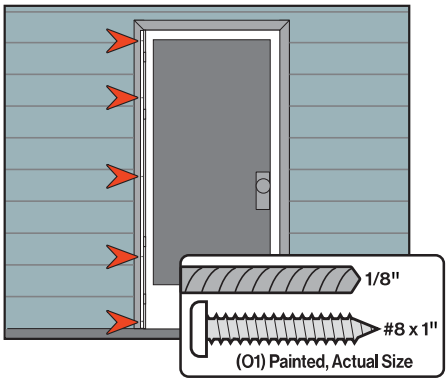

6. Using scissors, cut extender weatherstrip (E x 1) to length. Peel adhesive backing and install on left rail extender (H) as shown.

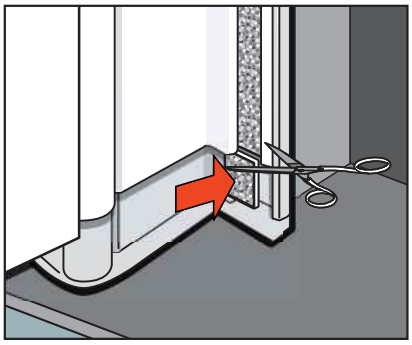

5 Install the Drip Cap (Step Ladder Required)

1. Place the drip cap (B) on the exterior door trim (A), above the storm door (I).
2. Close storm door (I) to verify consistent clearance between storm door (I) and drip cap (B), and align end of drip cap (B) with hinge rail (L). Once positioned, mark drip cap (B) holes with pencil then remove drip cap (B).
3. Pre-drill 1/8" holes and install drip cap (B) with screws (O1 x 3).
4. For added weather protection, caulk around the drip cap (B).

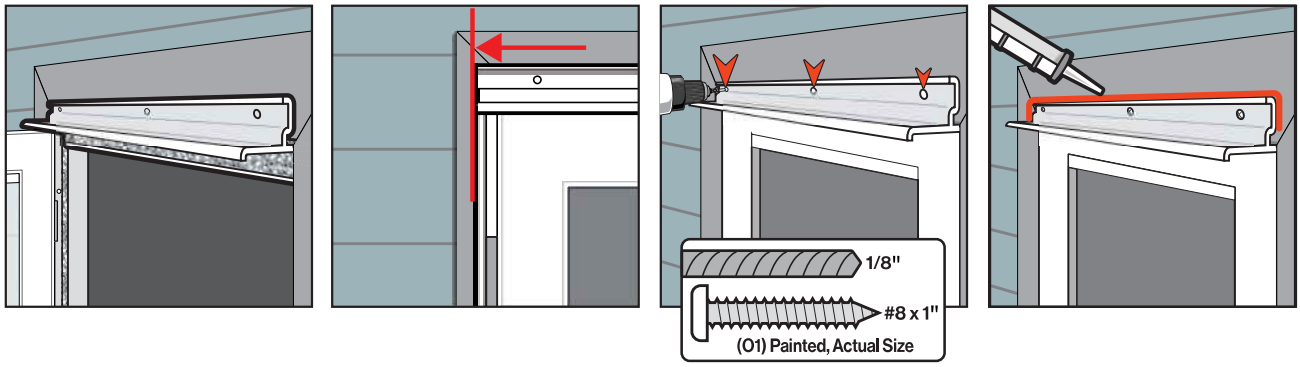

6 Install Latch Rail

1. Slide right rail extender (D) into the bottom of latch rail (C).
2. Place latch rail (C) tight against the drip cap (B).
3. Slide right rail extender (D) to door threshold (F).

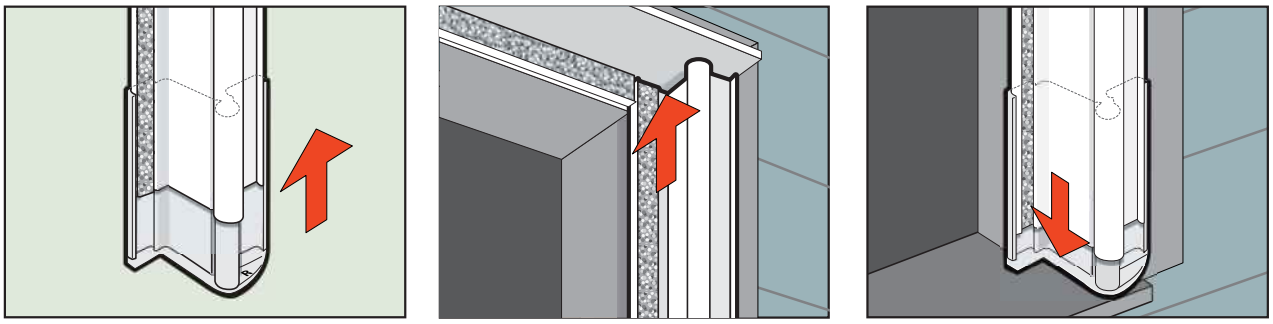

4. Open and close the storm door (I) and adjust the latch rail (C) to verify consistent clearance and weatherstrip contact between storm door (I) and latch rail (C). Mark exterior holes (x 5) with pencil.
5. Pre-drill 1/8" holes (x 5) through all latch rail (C) holes and attach the latch rail (C) with screws (O1 x 5).
6. Using scissors, cut extender weatherstrip (E x 1) to length. Peel adhesive backing and install on right rail extender (D) as shown.

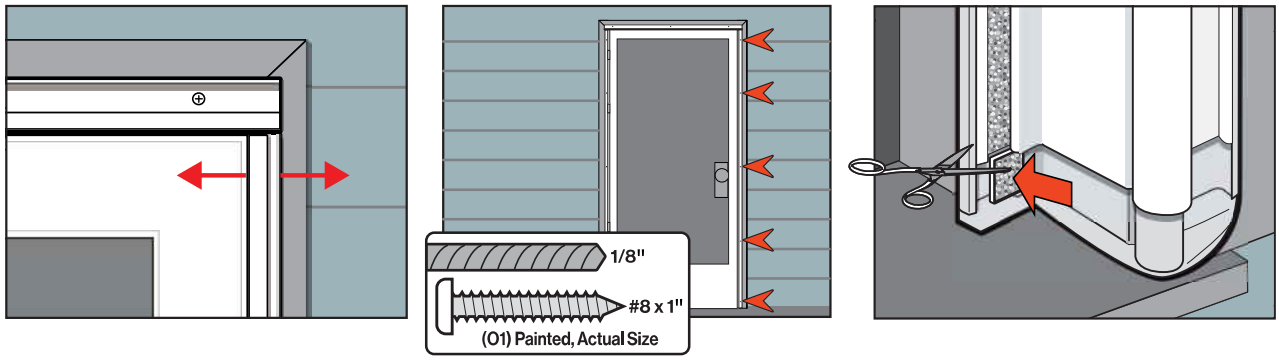

English

7 Storm Door Expander

1. Place expander (G) on storm door (I).

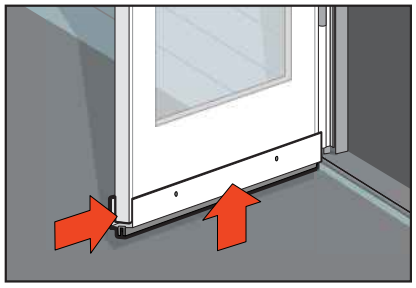

2. Adjust expander (G) until it is centered on the storm door (I) and the sweep lightly touches the threshold (F).

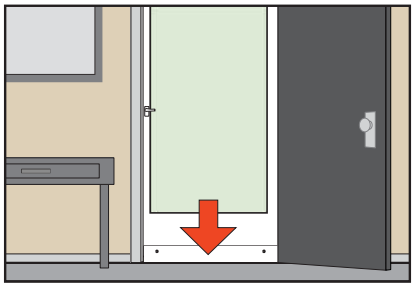

3. Pre-drill 3/32" holes (x 2) centered in the expander (G) slots and halfway through storm door (I). **Do not drill through the front of the storm door.**
Pro Tip: To ensure you do not puncture the other side, place tape on the drill bit 3/8" from the tip to measure drilling depth.

4. Secure expander (G) to storm door (I) with screws (N3 x 2).

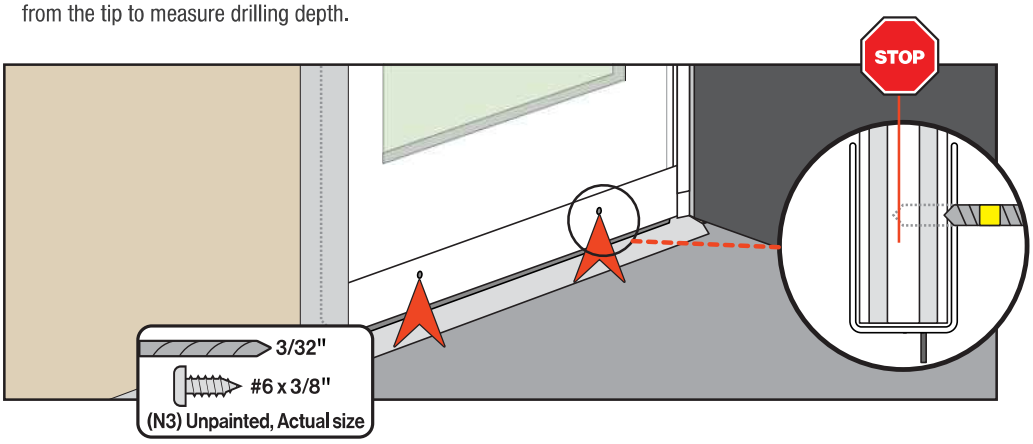

8 Install the Closer(s) and Handleset

Install the handleset, then the closer(s) (P), following their instructions, which can be found in the hardware kit (M) and/or handleset kit (Q) **(Select Models)**.

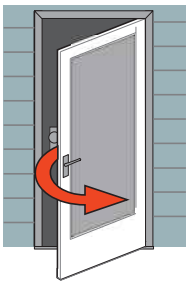

Installation Guide for **Right-Hinge** Doors

LARSON

Please turn to page 2 for Left-Hinge instructions.

Please read the complete installation instructions before beginning.
For more information visit larsondoors.com/resources.



Please have the registration number on hand when you call.

- Installation may require two people when lifting and installing the door.
- Use appropriate protective equipment.
- Children should not be allowed to play with the door.
- Failure to install door properly could result in an injury.

NOTE: Larson Manufacturing Company is not responsible for accidents or injury resulting from the use or installation of this product.

Parts List

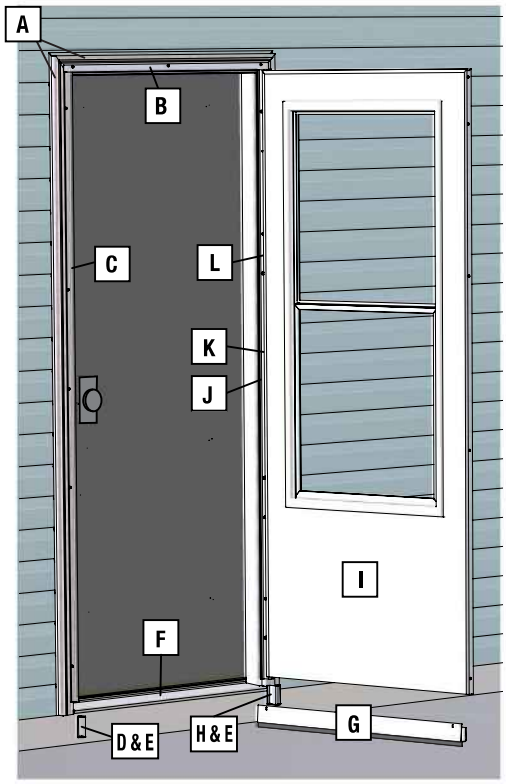

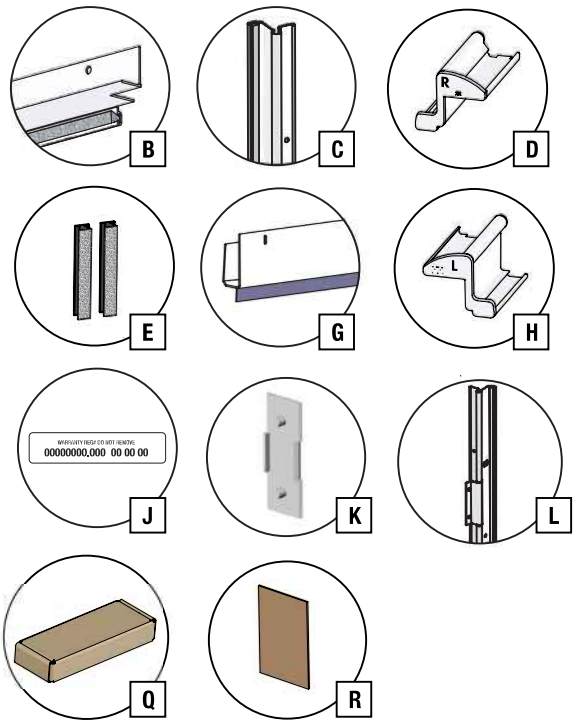

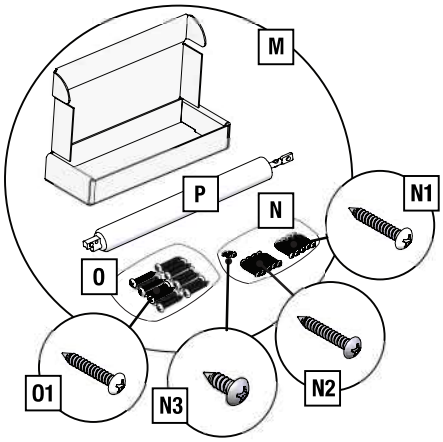

A Exterior Door Trim
B Drip Cap
C Latch Rail
D Right Rail Extender
E Extender Weatherstrip
F Door Threshold
G Expander (with Sweep)
H Left Rail Extender
I Storm Door
J Registration Number
K Hole Cover **(Select Models)**
L Hinge Rail
M Hardware Kit contents:
  N Installation Screw Pack 1
    N1 #8 x 1" Painted Screws (8 + 1 Spare)
    N2 #8 x 1" Unpainted Screws (8 + 1 Spare)
    N3 #6 x 3/8" Unpainted Screws (2)
  O Installation Screw Pack 2
    O1 #8 x 1" Painted Screws (13 + 1 Spare)
  P Closer **(Style/Quantities May Vary)**
Q Handleset Kit **(Select Models)**
R Handle Clearance Template **(Select Models)**

Tools and Materials Needed

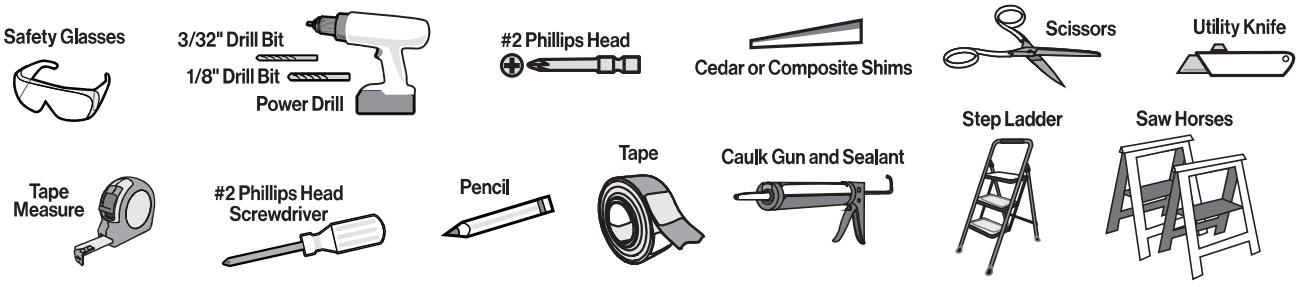

What's in the Box

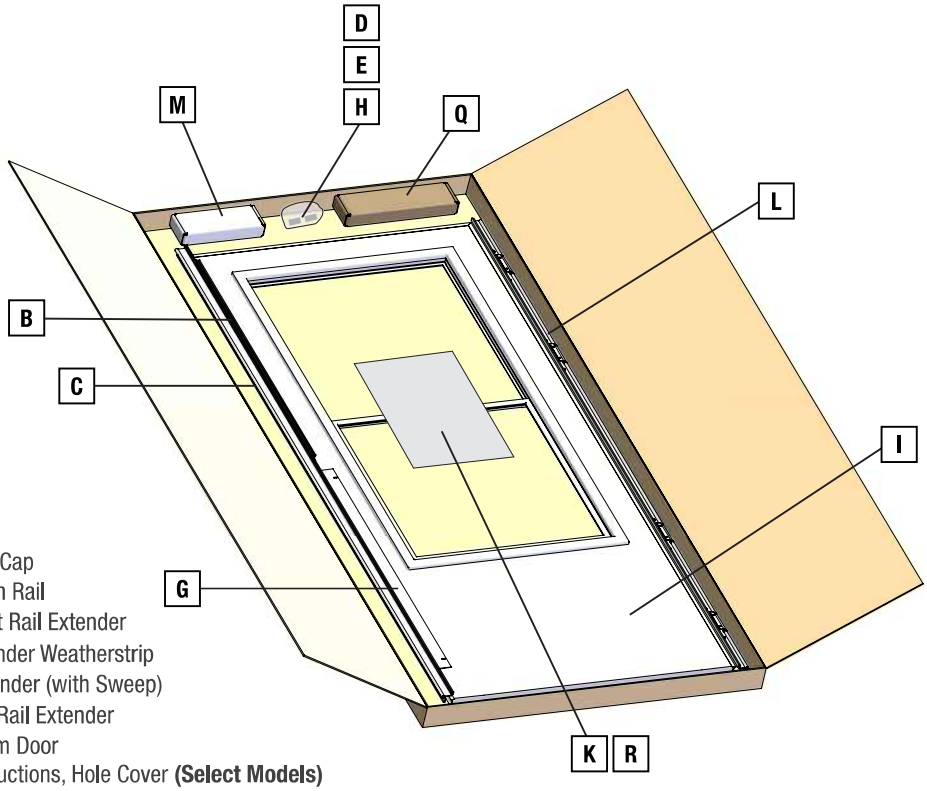

B Drip Cap
C Latch Rail
D Right Rail Extender
E Extender Weatherstrip
G Expander (with Sweep)
H Left Rail Extender
I Storm Door
K Instructions, Hole Cover **(Select Models)**
L Hinge Rail
M Hardware Kit (with Closer(s) **P** and Installation Screw Packs **N** & **O**)
Q Handleset Kit **(Select Models)**
R Handle Clearance Template **(Select Models)**

1 Preparation Steps

1. Before beginning the project please make sure you are wearing safety glasses.

   Your Larson® Reversa-Hinge storm door is designed for either right- or left-hinge installation. Confirm which side of the storm door will be the hinge side (left or right), as viewed from the exterior. Typically, the storm door hinges will be on the same side as the primary door hinges. Turn to page 2 for left-hinge installation. Oversize custom doors may not be reversible.

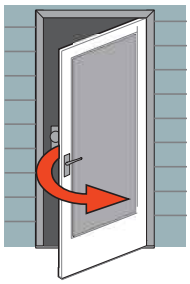

2. Minimum 1" wide x 1" deep mounting surface is required. Hinge-side shimming may be required to fit existing opening. Use an appropriate shim thickness to reduce the opening to size noted. Shims are not included.

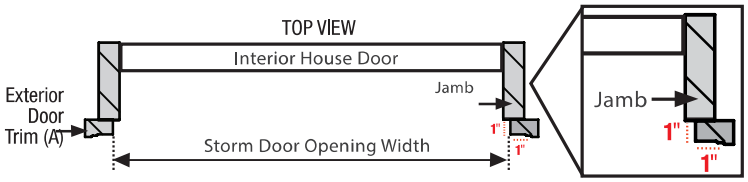

Nominal Door Sizes	Opening Width (no shim required)	Opening Width (shim required)	Shim to this Opening Width	Min. – Max. Height
30" x 81"	29-7/8" – 30"	30-1/16" – 30-3/8"	29-7/8" – 30"	80" to 81"
32" x 81"	31-7/8" – 32"	32-1/16" – 32-3/8"	31-7/8" – 32"	
34" x 81"	33-7/8" – 34"	34-1/16" – 34-3/8"	33-7/8" – 34"	
36" x 81"	35-7/8" – 36"	36-1/16" – 36-3/8"	35-7/8" – 36"	

3. Verify exterior door trim (A) is securely attached.



4. If a handle clearance template (R) was provided, follow the instructions on the template to check for handle clearance.

   If a handle clearance template (R) was not provided, the handleset can be installed at varying heights to avoid primary door hardware interference.

   Reference handleset installation instructions in hardware kit (M) or handleset kit (Q) for more information.

2 Set Placeholder Screw for Hinge Rail

1. Place the hinge rail (L) tight against the right side of the exterior door trim (A) and slide to top.

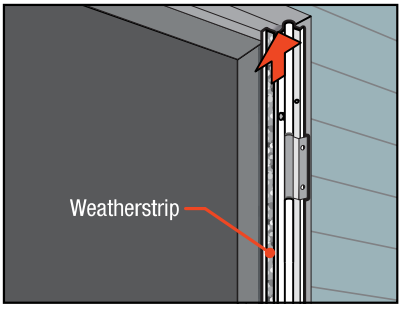

2. Locate top pre-hang hole and mark as shown with pencil. Remove hinge rail (L).

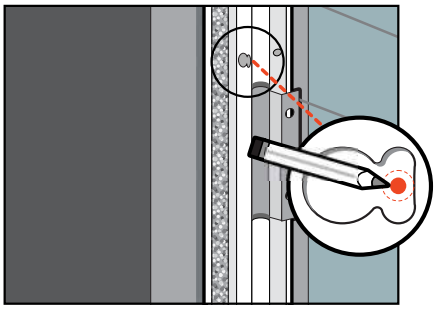

3. Pre-drill 1/8" hole and install #8 x 1" painted screw (N1 x 1), leaving 1/8" of screw threads exposed.

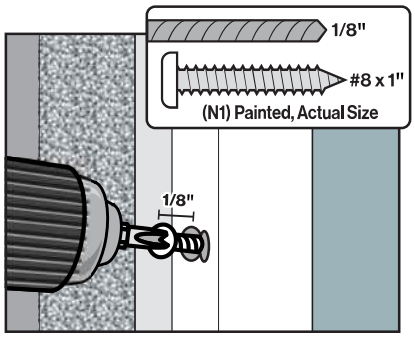

3 Attach Hinge Rail to Storm Door

1. Place storm door (I) on saw horses with the interior side face up.
2. Remove and discard the second screw from the top hinge-side corner of storm door (I).
3. Align the top hinge hole of the hinge rail (L) with the open hole on the storm door (I) and attach with screw (N2 x 1).

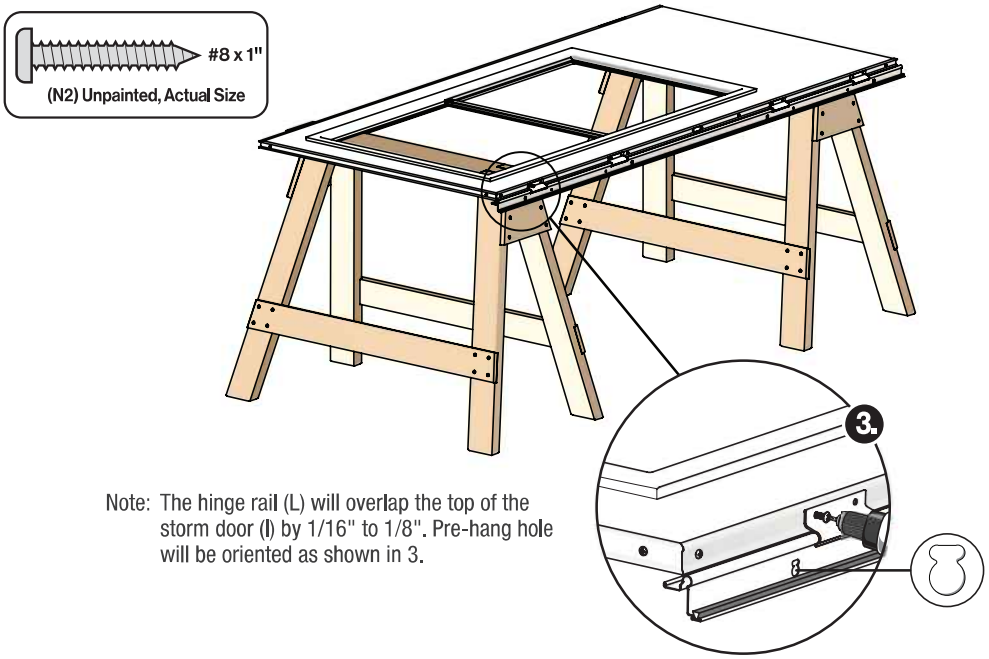

Note: The hinge rail (L) will overlap the top of the storm door (I) by 1/16" to 1/8". Pre-hang hole will be oriented as shown in 3.

4. Drill 1/8" pilot holes (x 7) into storm door (I) for remaining hinge holes on hinge rail (L). Remove any metal shavings created during this step.
5. Attach remaining hinges of the hinge rail (L) to the storm door (I) with unpainted screws (N2 x 7), starting at the bottom of the door.
6. Slide right rail extender (D) into the bottom of the hinge rail (L).
7. Install hole cover (K) (Select Models).

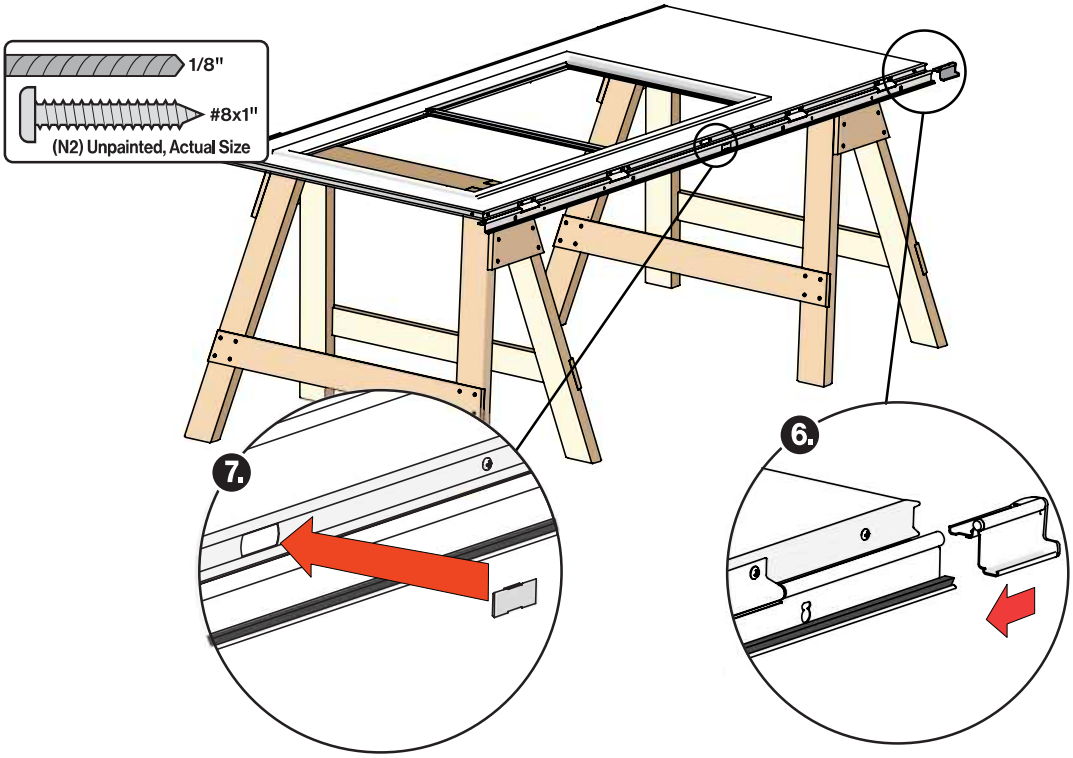

4 Attach Storm Door to Door Frame

1. Hang storm door (I) onto exterior door trim (A) using the placeholder screw from step 2. Shift the hinge rail (L) so the screw is in the shown position. The door will drop approximately 1/16". Tighten screw while pushing hinge rail (L) tight against the exterior door trim (A). **Do not overtighten.**

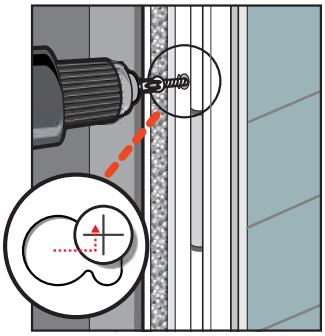

2. Press hinge rail (L) tight against exterior door trim (A) and pre-drill a 1/8" hole through the hinge rail's (L) round hole near the second hinge from the bottom. Install screw (N1 x 1). **Do not overtighten.**

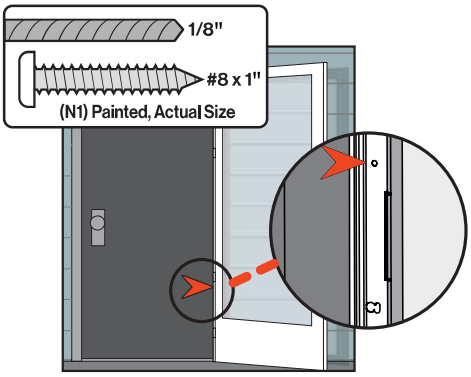

3. Slide right rail extender (D) to door threshold (F).

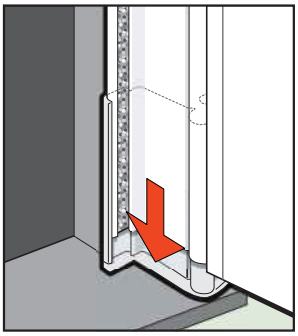

4. Pre-drill 1/8" holes (x 6) through all remaining round and pre-hang holes in hinge rail (L). Install screws (N1 x 6). **Do not overtighten.**

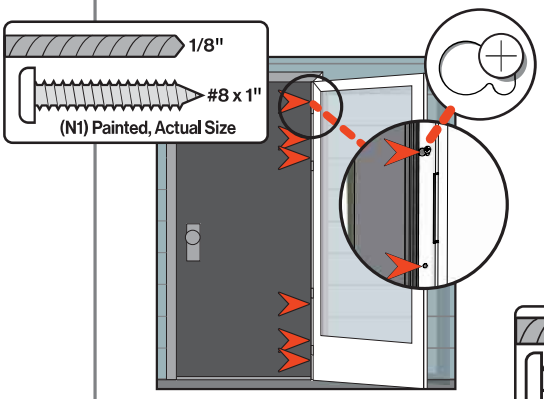

5. Pre-drill 1/8" holes (x 5) through hinge rail's (L) exterior holes and install screws (O1 x 5). **Do not overtighten screws.**

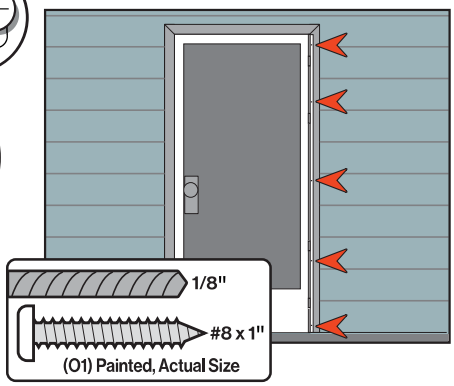

6. Using scissors, cut extender weatherstrip (E x 1) to length. Peel adhesive backing and install on right rail extender (D) as shown.

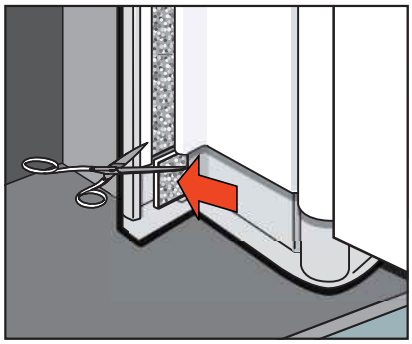

English

5 Install the Drip Cap (Step Ladder Required)

1. Place the drip cap (B) on the exterior door trim (A), above the storm door (I).
2. Close storm door (I) to verify consistent clearance between storm door (I) and drip cap (B), and align end of drip cap (B) with hinge rail (L). Once positioned, mark drip cap (B) holes with pencil then remove drip cap (B).
3. Pre-drill 1/8" holes and install drip cap (B) with screws (O1 x 3).
4. For added weather protection, caulk around the drip cap (B).

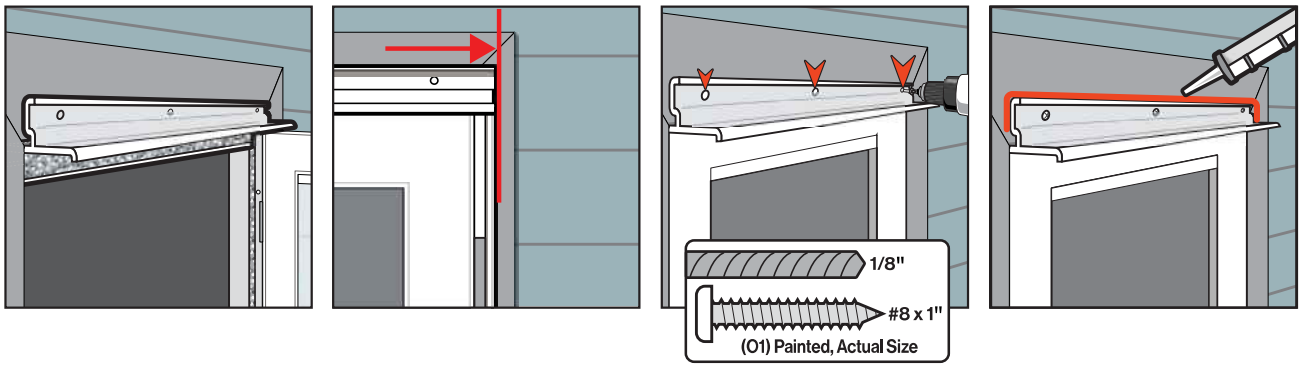

6 Install Latch Rail

1. Slide left rail extender (H) into the bottom of latch rail (C).
2. Place latch rail (C) tight against the drip cap (B).
3. Slide left rail extender (H) to door threshold (F).

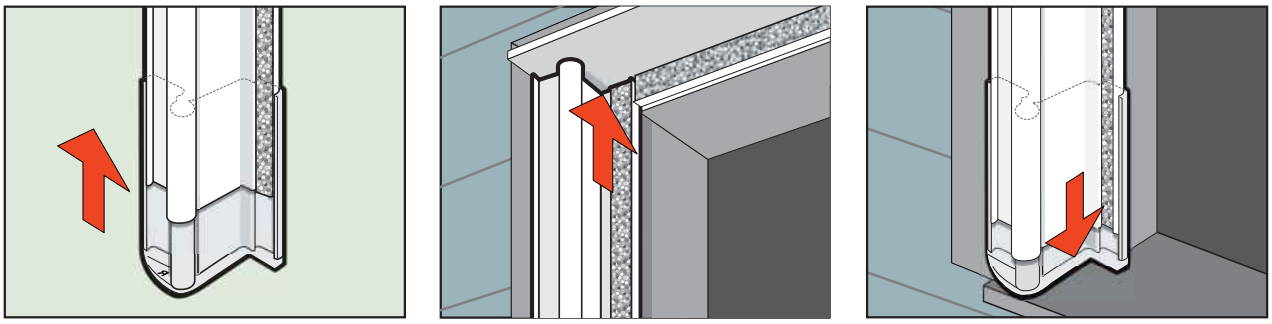

4. Open and close the storm door (I) and adjust the latch rail (C) to verify consistent clearance and weatherstrip contact between storm door (I) and latch rail (C). Mark exterior holes (x 5) with pencil.
5. Pre-drill 1/8" holes (x 5) through all latch rail (C) holes and attach the latch rail (C) with screws (O1 x 5).
6. Using scissors, cut extender weatherstrip (E x 1) to length. Peel adhesive backing and install on left rail extender (H) as shown.

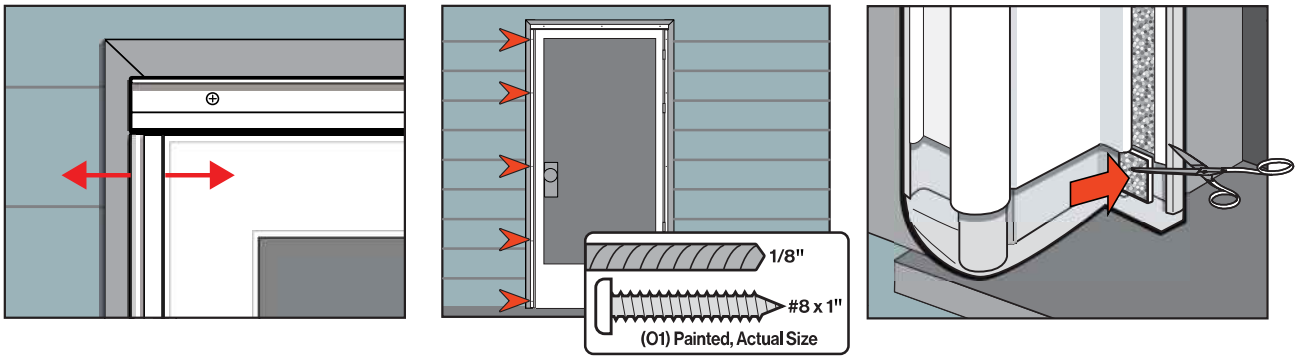

7 Storm Door Expander

1. Place expander (G) on storm door (I).

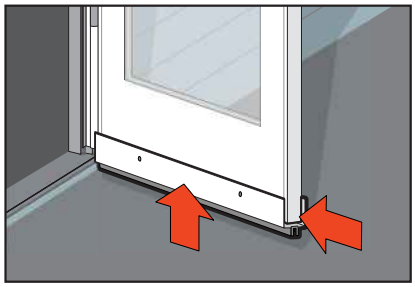

2. Adjust expander (G) until it is centered on the storm door (I) and the sweep lightly touches the threshold (F).

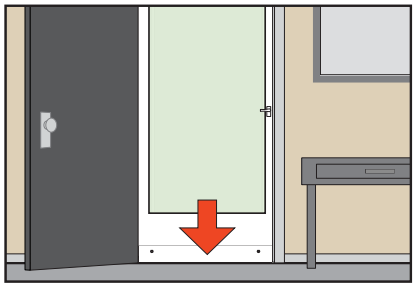

3. Pre-drill 3/32" holes (x 2) centered in the expander (G) slots and halfway through storm door (I). **Do not drill through the front of the storm door.**
Pro Tip: To ensure you do not puncture the other side, place tape on the drill bit 3/8" from the tip to measure drilling depth.

4. Secure expander (G) to storm door (I) with screws (N3 x 2).

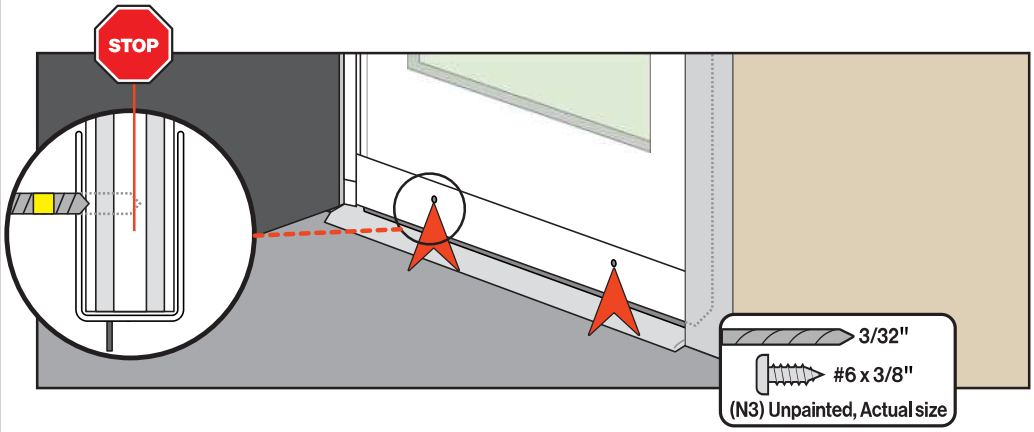

8 Install the Closer(s) and Handleset

Install the handleset, then the closer(s) (P), following their instructions, which can be found in the hardware kit (M) and/or handleset kit (Q) **(Select Models)**.

English